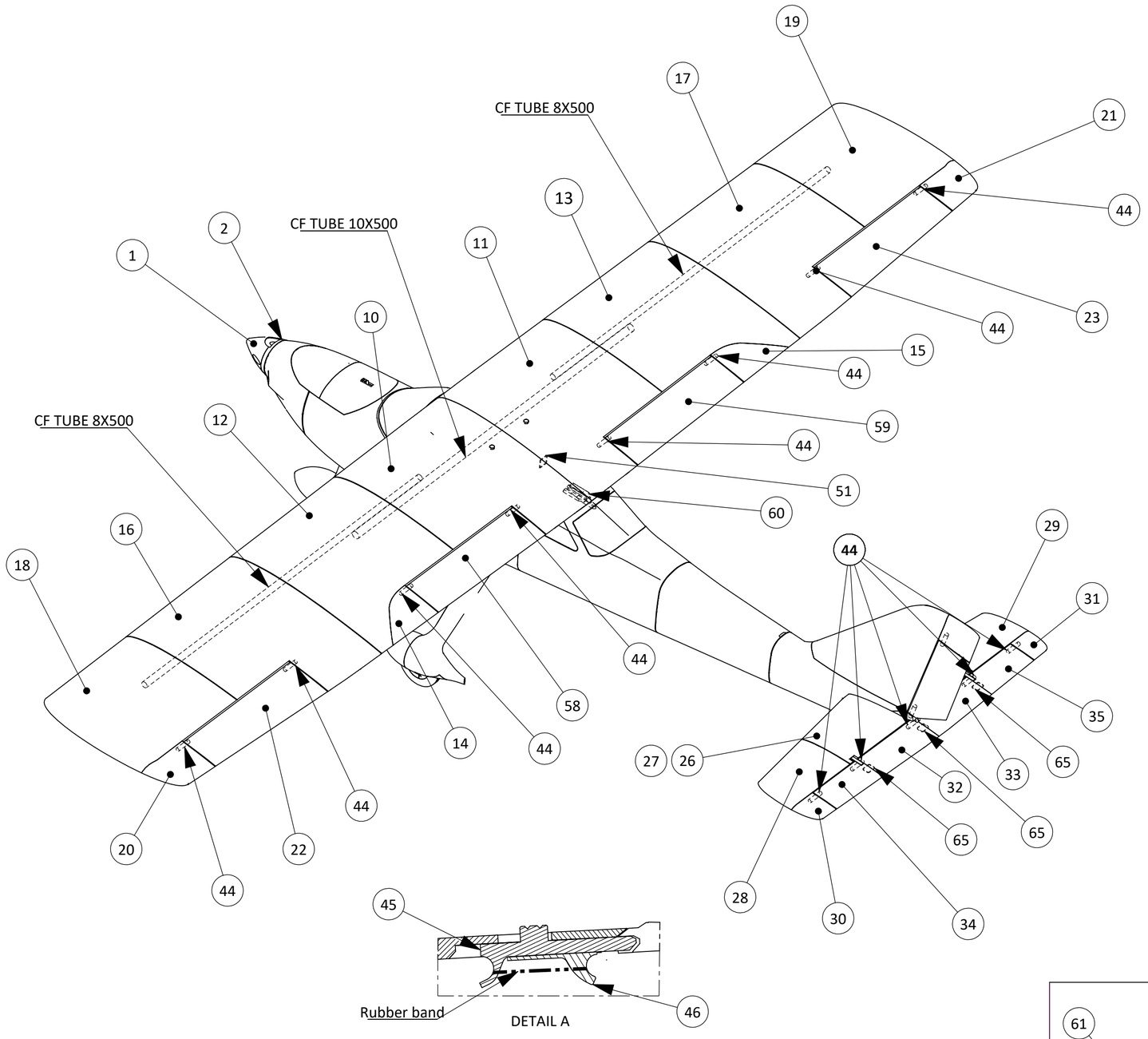

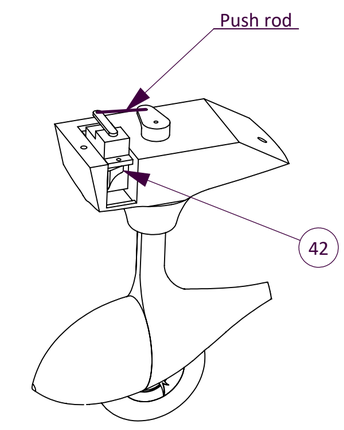

FRONT LANDING GEAR DETAIL VIEW

	ITEM	NAME	CATEGORY
	1	Spinner 1	C
5	2	Spinner 2	C
	3	Fus 1	D
	4	Fus 2	D
	5	Fus 3	D
	6	Fus 4	B2-LW
	7	Fus 5	B2-LW
	8	Fus 6	B2-LW
	9	Rudder	B2-LW
	10	Wing 1L	B2-LW
	11	Wing 1R	B2-LW
	12	Wing 2L	B2-LW
	13	Wing 2R	B2-LW
	14	Wing 3L	B2-LW
	15	Wing 3R	B2-LW
	16	Wing 4L	B2-LW
	17	Wing 4R	B2-LW
	18	Wing 5L	B2-LW
	19	Wing 5R	B2-LW
	20	Wing 6L	B2-LW
	21	Wing 6R	B2-LW
7B	22	Aileron 1L	B2-LW
7B	23	Aileron 1R	B2-LW
	24	Canopy 1	D
	25	Canopy 2	D
	26	HTP 1L	B2-LW
	27	HTP 1R	B2-LW
	28	HTP 2L	B2-LW
	29	HTP 2R	B2-LW
	30	HTP 3L	B2-LW
	31	HTP 3R	B2-LW
	32	Elev 1L	B2-LW
	33	Elev 1R	B2-LW
	34	Elev 2L	B2-LW
	35	Elev2R	B2-LW
	36	MLG 1L	C
	37	MLG 1R	C
	38	MLG 2L	C
	39	MLG 2R	C
X3	40	Rim	C
7 X3	41	Tyre	C
X3	42	Servo_holder_fus	C
	43	Rudder and elevator hinge	C
X15	44	Axis	C
	45	Lock_1	C
	46	Lock_2	C
5	47	Motor_holder	C
X2	48	Elev_hinge	C
X4	49	Servo holder_wing	C
X4	50	Horn	C
X3	51	Guide	C
	52	Right anchor nut lower	C
	53	Right anchor nut upper	C
	54	Left anchor nut lower	C
	55	Left anchor nut upper	C
	56	NLG 1	C
8	57	NGL 2	C
	58	Flap 1L	B2-LW
	59	Flap 1R	B2-LW
	60	Wing hook	C
	61	VTP_1	B2-LW
	62	VTP_2	B2-LW
	63	Front landing gear holder	C
	64	Front landing gear horn	C
X3	65	Guide elevator	C
	66	NLG2_top	C
	67	NLG2_mid	C
	68	NLG2_lower	C

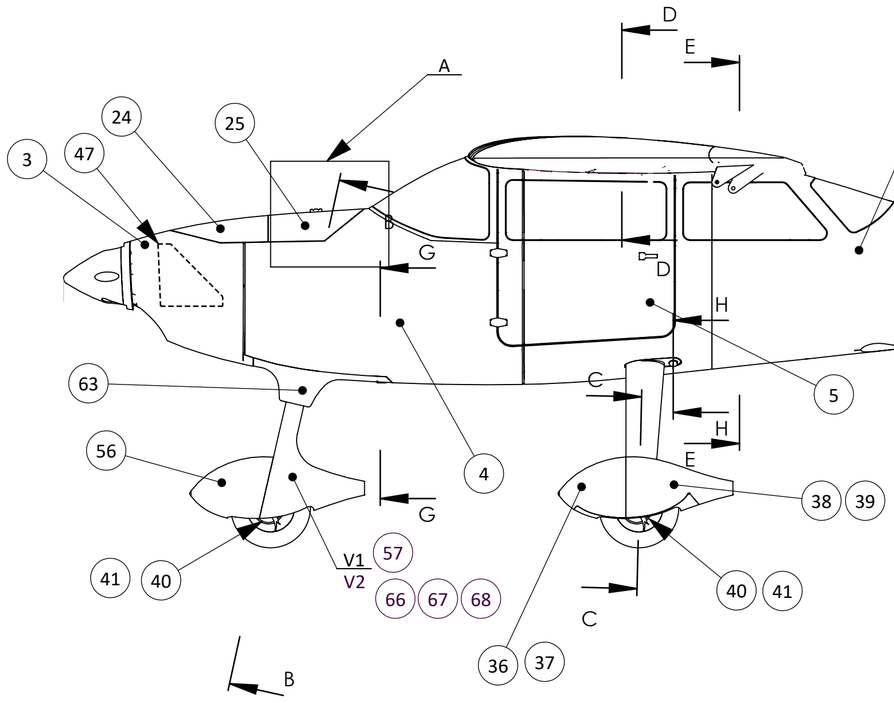

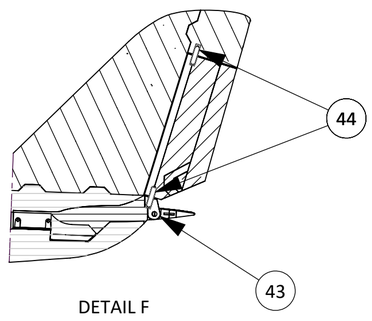

DETAIL F

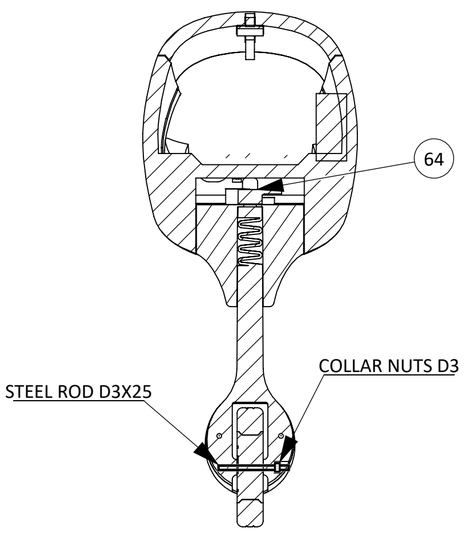

SECTION B-B

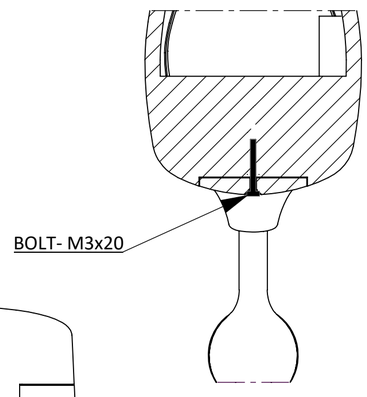

SECTION G-G

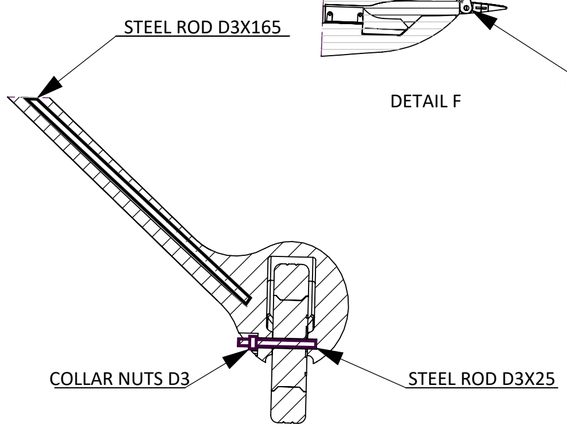

SECTION C-C

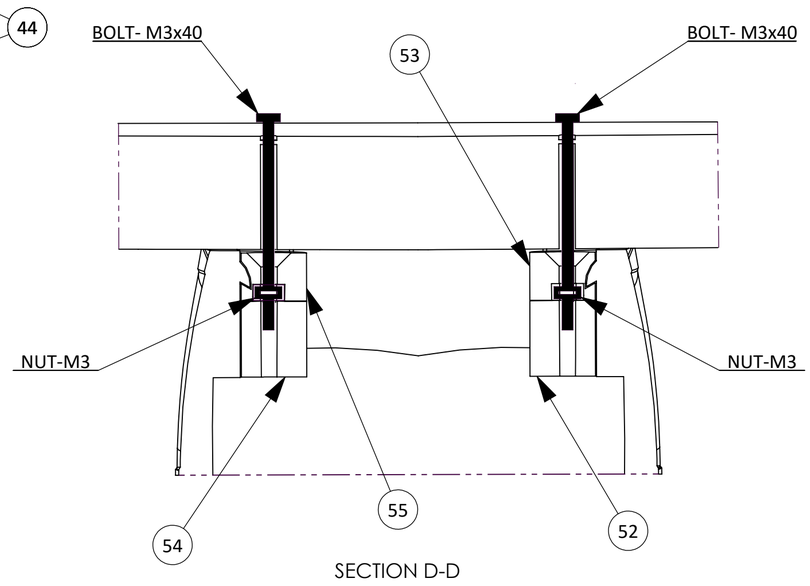

SECTION D-D

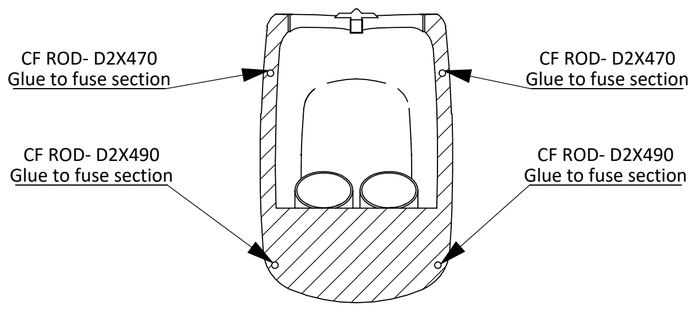

SECTION E-E

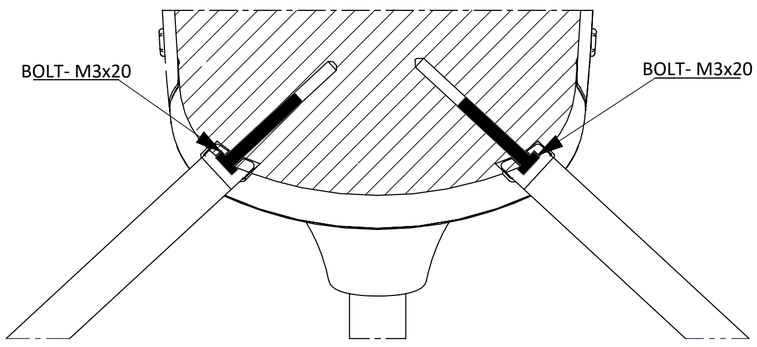

SECTION H-H

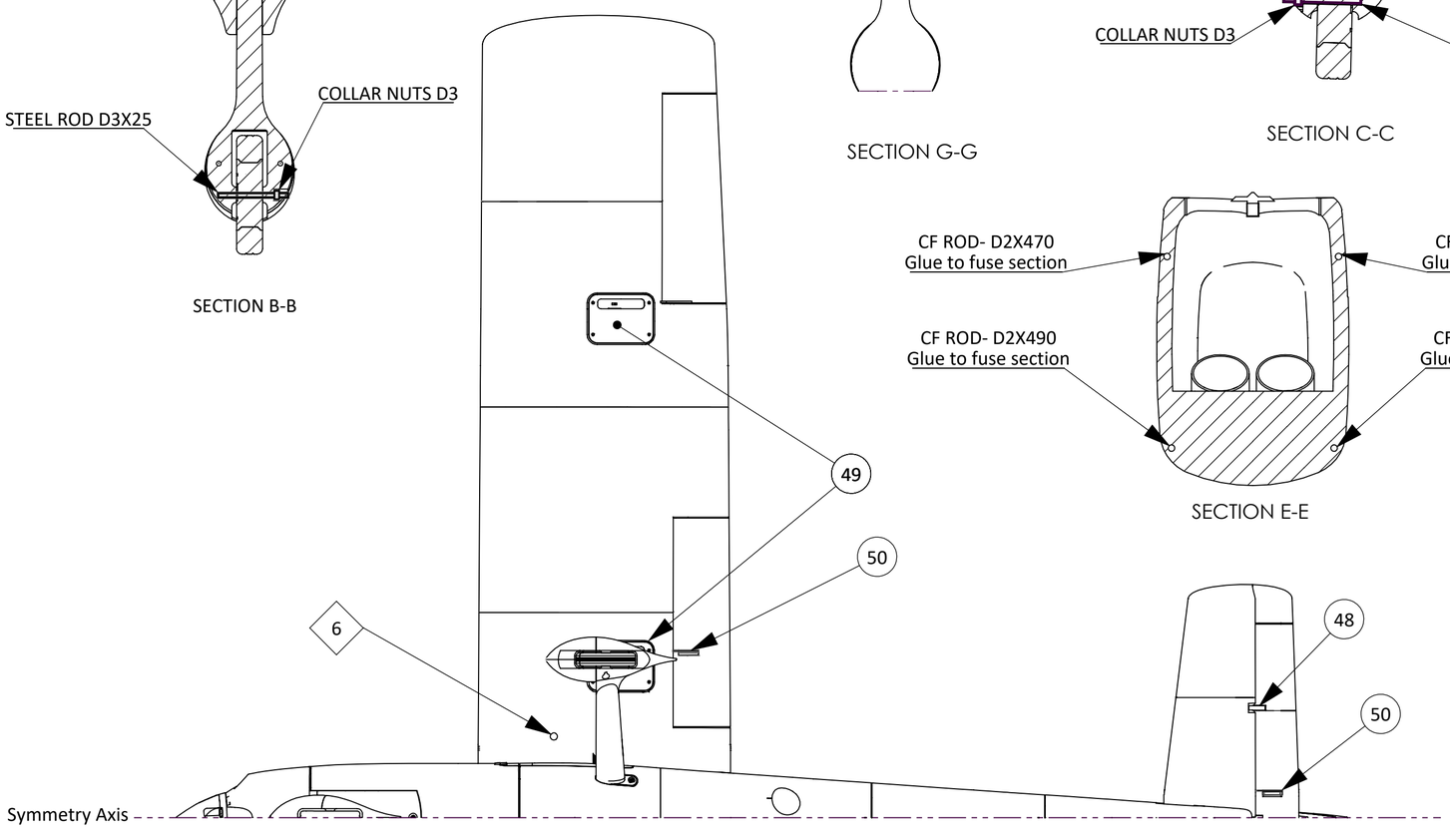

BOTTOM VIEW

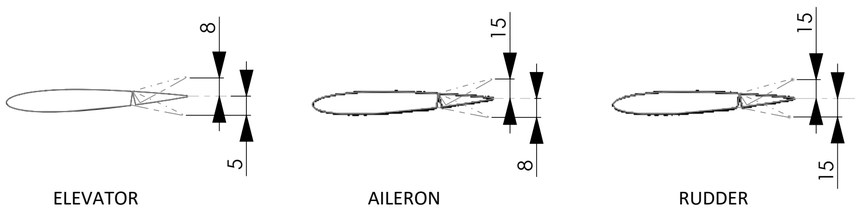

ELEVATOR AILERON RUDDER

Recommended throw

PRINTING PARAMETER	CATEGORY		
	B2-LW	CAT D	C
Material	LW-PLA	PLA+/PETG	PLA/PETG TPU/ABS
Layer height (mm)	0.25	0.2	0.13
Bottom layers	4	4	4
Top layers	0	4	6
Wall lines / perimeter	1	1	2
Infill density (%)	0	3	10
Printing temp (°C)	235	220	205 – 240
Spiralize Outer Contour / Vase Mode	YES	NO	NO
Flow (%)	53	100	100
Speed (mm/s)	55	50-200	50-200
Nozzle diameter(mm)	0.4	0.4	0.4
Printing support	NO	NO	NO

7B Use 7 bottom layers

8 Add printing support

7 Print it with flexible filament

6 Center of gravity marking under the wing

5 If your motor gets too hot, print this part using ABS or another heat-resistant material