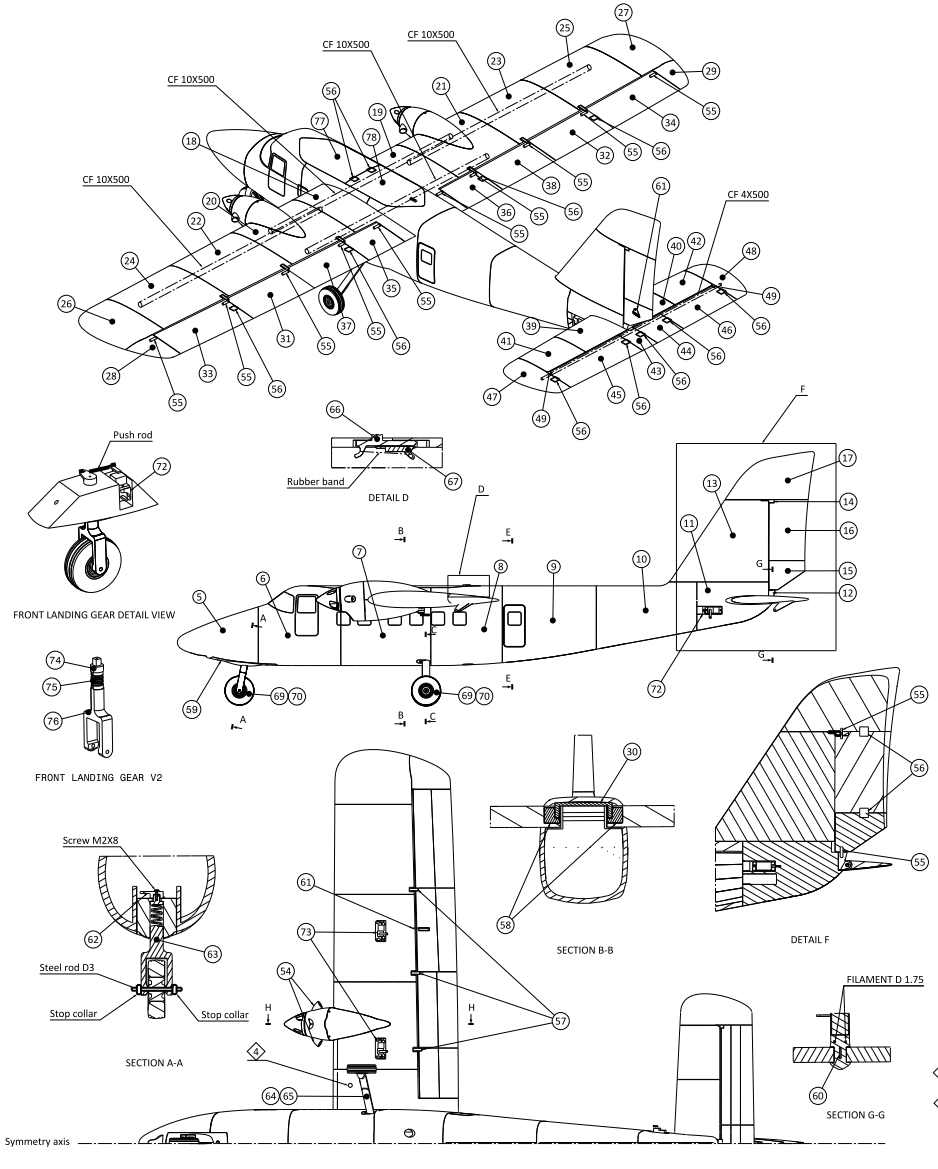

ITEM	NAME	CATEGORY
1	Spinner1	C
2	Spinner2	C
3	Spinner1_sym	C
4	Spinner2_sym	C
5	Fus1	D
6	Fus2	D
7	Fus3	D
8	Fus4	D
9	Fus5	B2-LW
10	Fus6	B2-LW
11	Fus7	B2-LW
12	Fus8	C
13	VTP	B2-LW
14	Rudder_hinge	C
15	Rudder1	B2-LW
16	Rudder2	B2-LW
17	Rudder3	B2-LW
18	Wing1L	B2-LW
19	Wing1R	B2-LW
20	Wing2L	B2-LW
21	Wing2R	B2-LW
22	Wing3L	B2-LW
23	Wing3R	B2-LW
24	Wing4L	B2-LW
25	Wing4R	B2-LW
26	Wing5L	B2-LW
27	Wing5R	B2-LW
28	Wing6L	B2-LW
29	Wing6R	B2-LW
30	Wing_lock	C
31	Aileron1L	B2-LW
32	Aileron1R	B2-LW
33	Aileron2L	B2-LW
34	Aileron2R	B2-LW
35	Flap_1L	B2-LW
36	Flap_1R	B2-LW
37	Flap_2L	B2-LW
38	Flap_2R	B2-LW
39	HTP_1L	B2-LW
40	HTP_1R	B2-LW
41	HTP_2L	B2-LW
42	HTP_2R	B2-LW
43	Elev1L	B2-LW
44	Elev1R	B2-LW
45	Elev2L	B2-LW
46	Elev2R	B2-LW
47	Elev3L	B2-LW
48	Elev3R	B2-LW
X2 49	Elev_hinge2	C
X2 50	Engine_pod_1L	D
X2 51	Engine_pod_1R	D
X2 52	Engine_pod_2L	D
X2 53	Engine_pod_2R	D
X4 54	Exhaust	C
X12 55	Axis	C
X13 56	Guide	C
X6 57	Hinge_wing	C
X2 58	Insert_wing	C
59	Insert_NLG	C
X3 60	Insert	C
X3 61	Horn	C
62	NLG_Horn	C
63	NLG	C
64	MLG_L	C
65	MLG_R	C
66	Lock_1	C
67	Lock_2	C
X2 68	Cowling	D
X3 69	Tyre	C
X6 70	Rim_half	C
X2 71	Motor_cross	C
X3 72	Servo_holder_fus	C
X4 73	Servo_holder_wing	C
74	NLG_top	C
75	NLG_mid	C
76	NLG_Lower	C
77	Canopy_1	D
78	Canopy_2	D

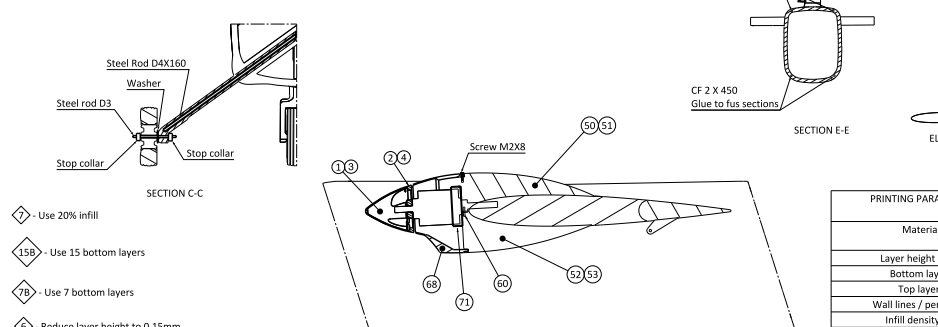

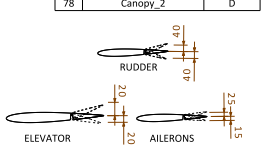

7 - Use 20% infill

15B - Use 15 bottom layers

7B - Use 7 bottom layers

6 - Reduce layer height to 0,15mm

5 - Use flexible material

4 - Center of gravity marking under the wing

2 - If your motor gets too hot, print this part using ABS or another heat-resistant material

PRINTING PARAMETER	CATEGORY		
	B2-LW	C	D
Material	LW-PLA	PLA/PETG TPU/ABS	PLA+/ PETG
Layer height (mm)	0.25	0,13	0,2
Bottom layers	4	4	4
Top layers	0	6	4
Wall lines / perimeter	1	2	1
Infill density (%)	0	10	3
Printing temp (°C)	235	205 to 240	220
Speed (mm/s)	55	50 to200	50 to 200
Flow (%)	53	100	100
Spiralize Outer Contour / vase mode	YES	NO	NO
Printing Support	NO	NO	NO
Nozzle diameter (mm)	0,4	0,4	0,4